(iv) It made him angry.
(v) He put his feet on the table.
(vi) She reminded him to close the windows.
(vii) A face appeared at the window.

Model answer for 1

Reduce may be regarded as an ergative verb (i.e. like *roll*) since it may be used not only as transitive ,as shown in sentence (1), but may also be used as intransitive ,as shown below.

His speed reduced to 30 mph.
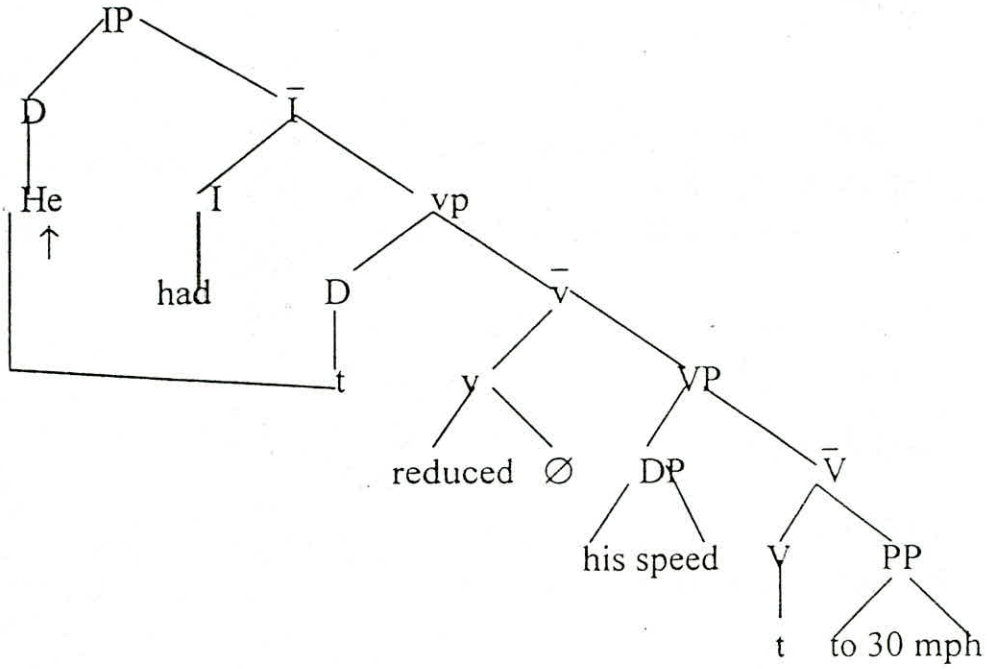
Sentence (1) is assumed to be derived as shown in the structure below: